ISO 9001 INDEL BAURU
Protection for Energy Distribution

Security products, produced with seriousness.

Torquimetric screw with Stainless steel pivot tip.

# TERMINAL CONNECTOR TORQUIMETRIC PIN

Manufactured with one or two fixing screws and short or long solid pin.

***Practicality, facility and speed during the installation process.***
***Waive the use of special tools!***

The screw with stainless steel tip can be applied with copper and aluminum cable.

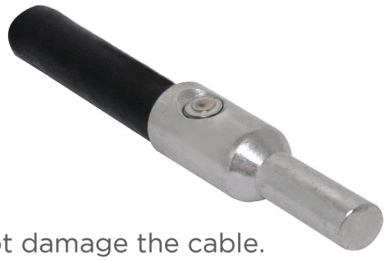

Do not damage the cable.

Looking to provide improvements to the market, Indel Bauru developed the **Terminal Connector Torquimetric Pin** for utilization in cables and flexible conductors in installation of Electricity Meters and electrical systems in general.

## MAIN BENEFITS

- *It can be applied in copper cables from 10mm² to 240mm²;*
- *Cold forming process in tinned electrolytic copper;*
- *Conductivity improvement;*
- *Corrosion resistant.*

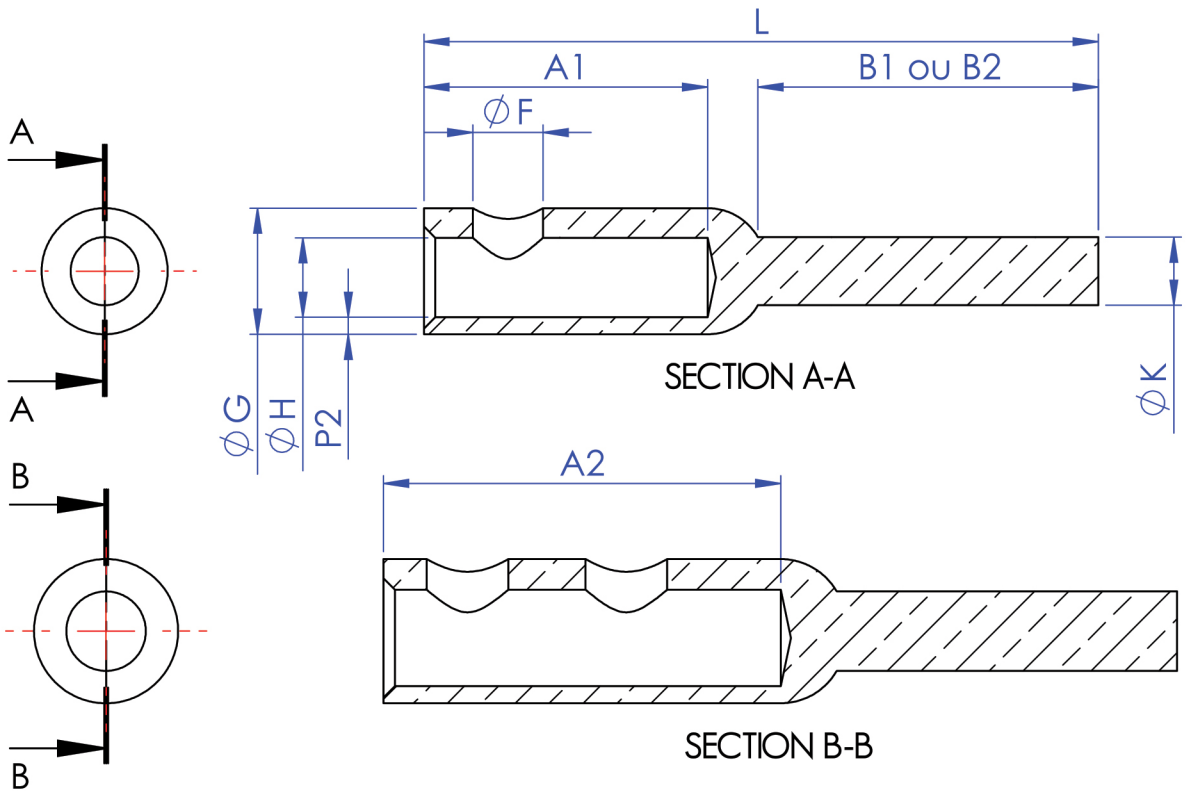


**A1 - 1 SCREW**
**A2 - 2 SCREWS**

**B1 - SHORT**
**B2 - LONG**

| SECTION | A1 ± 0.50 | A ± 0.52 | B1 ± 0.50 | B2 ± 0.50 | F | G ± 0.10 | H ± 0.20 | K ± 0.10 | P2 ± 0.50 | L ± 2.00 (B1 or B2) |
|---|---|---|---|---|---|---|---|---|---|---|
| 10mm² | 29.00 | * | 30.00 | 45.00 | M5 | 7.93 | 4.50 | 3.90 | 1.00 | 63.00 ou 78.00 |
| 16mm² | 29.00 | * | 30.00 | 45.00 | M6 | 9.52 | 5.50 | 4.90 | 1.50 | 64.00 ou 79.00 |
| 25mm² | 29.00 | * | 30.00 | 45.00 | M7 | 11.11 | 7.00 | 6.00 | 1.50 | 64.00 ou 79.00 |
| 35mm² | * | 35.00 | 30.00 | 45.00 | M8 | 12.70 | 8.50 | 7.00 | 1.50 | 71.00 ou 86.00 |
| 50mm² | * | 40.00 | 30.00 | 45.00 | M8 | 14.28 | 9.90 | 8.00 | 1.50 | 76.00 ou 91.00 |
| 70mm² | * | 40.00 | 30.00 | 45.00 | M10 | 17.46 | 11.50 | 9.60 | 2.00 | 78.00 ou 93.00 |
| 95mm² | * | 45.00 | 30.00 | 45.00 | M12 | 19.05 | 13.50 | 11.50 | 2.00 | 83.00 ou 98.00 |
| 120mm² | * | 45.00 | 30.00 | 45.00 | M12 | 22.22 | 15.00 | 12.80 | 2.50 | 85.00 ou 100.00 |
| 150mm² | * | 50.00 | 30.00 | 45.00 | M14 | 23.81 | 17.50 | 14.50 | 2.50 | 89.00 ou 104.00 |
| 185mm² | * | 60.00 | 30.00 | 45.00 | M14 | 27.10 | 18.50 | 15.70 | 3.00 | 101.00 ou 116.00 |
| 240mm² | * | 60.00 | 30.00 | 45.00 | M18 | 30.00 | 21.30 | 18.50 | 3.00 | 102.00 ou 117.00 |

ISO 9001
INDEL BAURU
Protection for Energy Distribution

***Sales and Factory***
*Joaquim Marques de Figueiredo street, 2-79*
*Industrial District I - Bauru-SP - Brazil - Zip Code 17034-290*
*Ph. +55 (14) 3281-7070*
***vendas@indelbauru.com.br***
***www.indelbauru.com***